Comparator Gauge Compika 1001 wa

water protected, shockproof, with overtravel

The use of a water protected Comparator Gauge is recommended for applications in splash water environments. This version, conforming to protection class IP 53, features the following:

- A flexible rubber bellows is fitted where the spindle enters the stem.
- The back is sealed with a rubber ring.
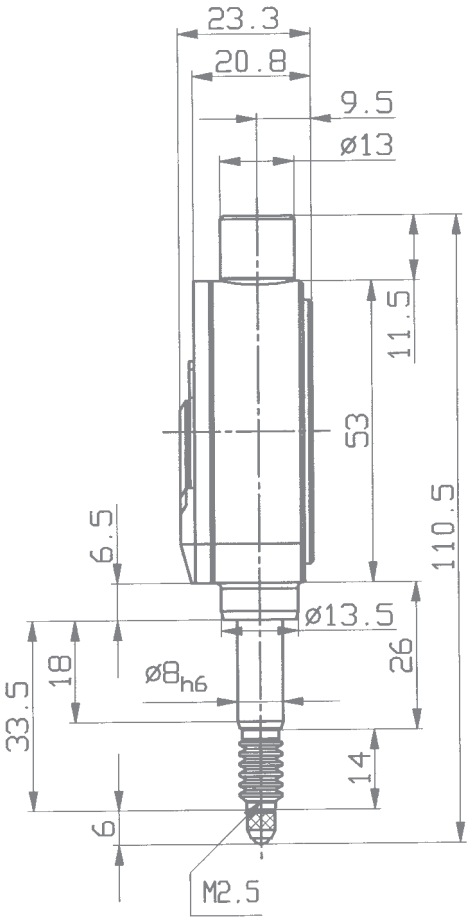
Comparator Gauge Compika 1001 wa water protected	
Reading	0.001 mm
Range	0.1 mm
Dial reading	50-0-50
Bezel-Ø	62 mm
Stem-Ø	8 h 6
Dimensions and accuracy according to	DIN 879-1
Initial measuring force	1.1 N ± 20%
Dimensioned drawing	page 87